Expand DisplayTunnel

Bring Artwork to the Green Bleed Line

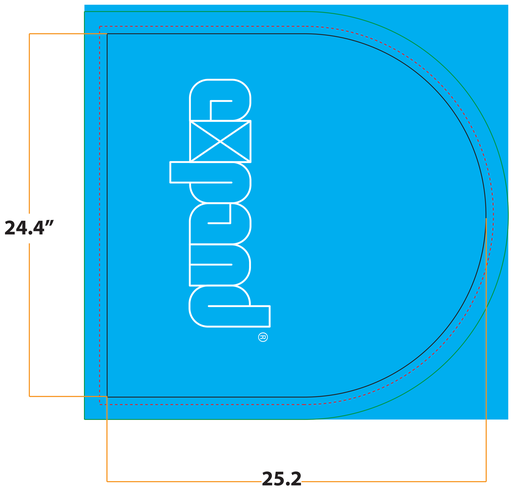

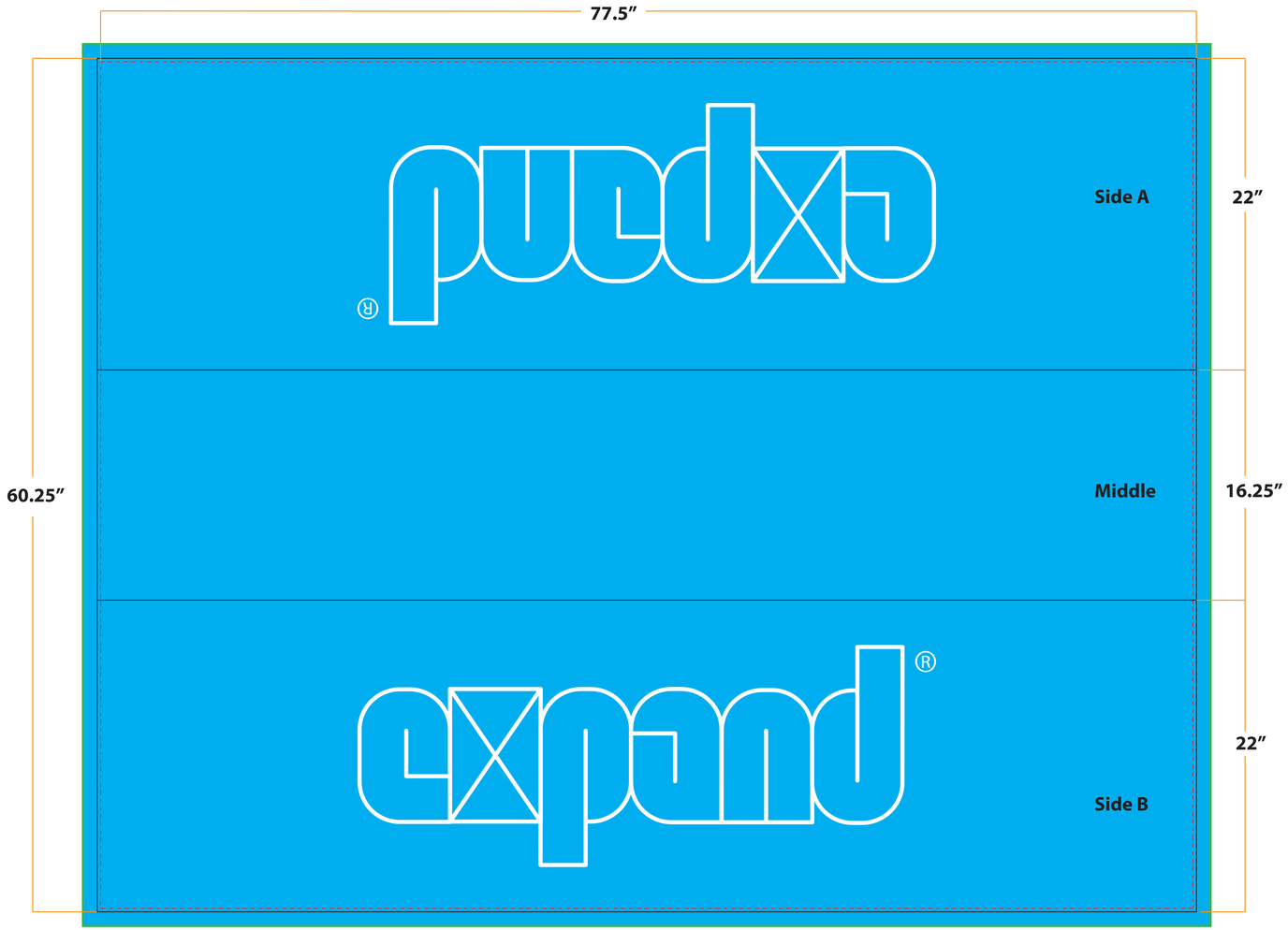

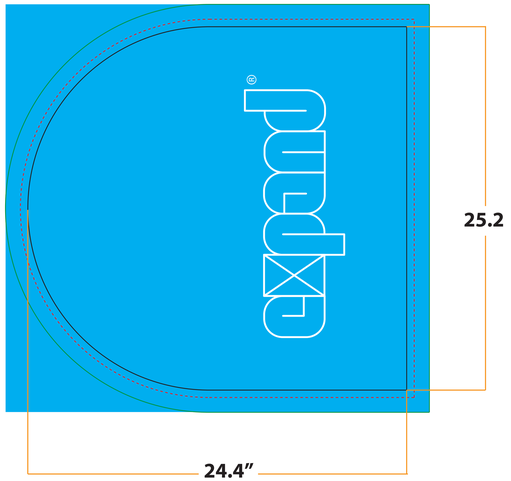

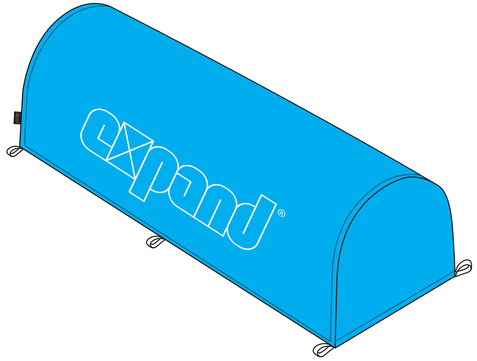

speedyDisplays
3590 NW 54th St, Suite 7
Fort Lauderdale, FL 33309
888-880-5851
www.speedydisplays.com
info@speedydisplays.com